26-1500 Series

Regulators - Pressure Reducing

D26150541X012

Specifications

For other materials or modifications, please consult TESCOM.

OPERATING PARAMETERS

Pressure rating per criteria of ANSI/ASME B31.3

Maximum Inlet Pressure
Stainless: 6000 psig / 414 bar
Brass, Aluminum: 5000 psig / 345 bar

Outlet Pressure Ranges
0-50, 0-150, 0-250 psig
0-3.4, 0-10.3, 0-17.2 bar

Design Proof Pressure
150% maximum rated

Leakage
Bubble-tight

Ambient Operating and Fluid Media Temperature
-40°F to 165°F / -40°C to 74°C

Flow Capacity
C_V = 0.08

Maximum Operating Torque
20 in-lbs / 2.3 N•m

MEDIA CONTACT MATERIALS

Body
316 Stainless Steel, Brass, Aluminum

Bonnet
300 Series Stainless Steel

40 Micron Filter
316 Stainless Steel

Seat
CTFE

O-Rings
Buna-N

Diaphragm
Buna-N

Remaining parts
300 Series Stainless Steel

OTHER

Cleaning
CGA 4.1 and ASTM G93

Weight (without gauges)
Stainless, Brass: 3 lbs / 1.4 kg

TESCOM 26-1500 Series non-venting regulator offers a sensitive, large elastomeric diaphragm design and precision outlet pressure control.

Applications

- Research labs
- Breathing air diving manifolds
- Low flow purge systems
- Gas and liquid sampling

Features and Benefits

- Diaphragm design for accurate pressure regulation
- Numerous porting and soft good options are available
- Excellent repeatability
- Non-venting (for venting design, see 26-1600 Series)
- Low operating handknob torque
- Panel mounting (bracket included)
- Available in Stainless Steel, Brass, or Aluminum construction
- Gauge ports are available
- High flow C_V = 0.24 version is available (maximum inlet pressure: 3000 psig / 207 bar)

TESCOM

26-1500 Series Regulator Drawings

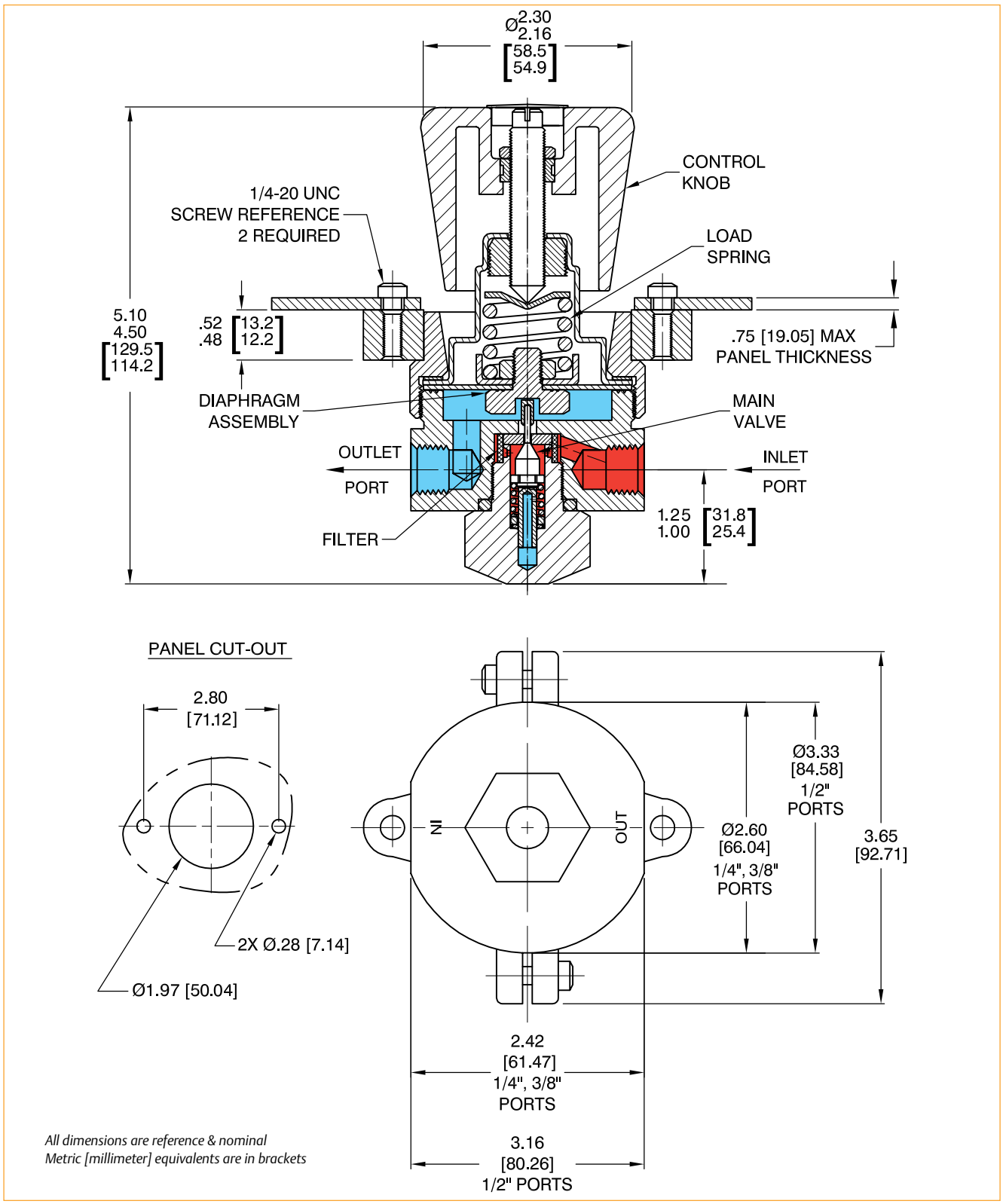

EMERSON
Process Management

26-1500 Series Regulator Flow Charts

For more information on how to read flow curves, please refer to the Flow Curves and Calculations document (debul2007x012) in the TESCOM catalog or on www.tescom.com.

26-1500 Standard C_V Flow

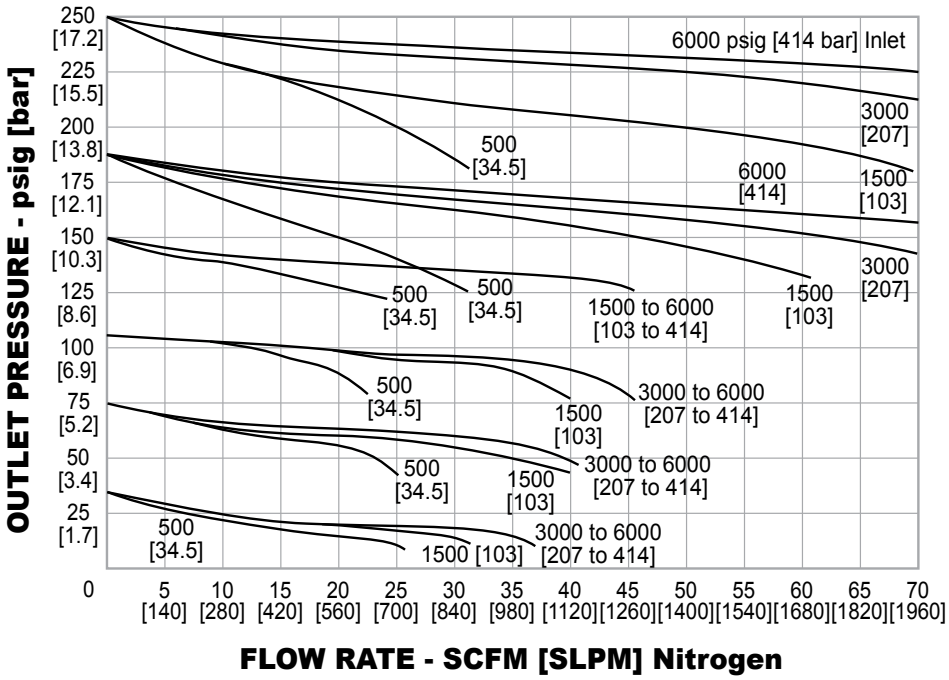

26-1500 Optional C_V = 0.24 Flow

Model No. 26-1562-24-004

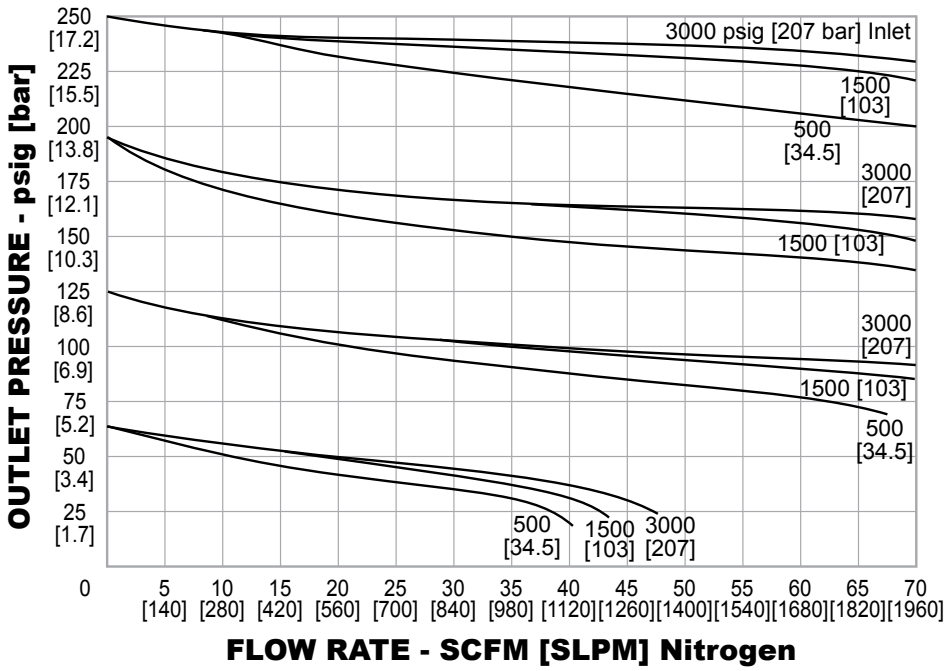

26-1500 Series Regulator Part Number Selector

Repair Kits, Accessories & Modifications may be available for this product. Please contact TESCOM for more information.

Example for selecting a part number:

26-15	6	1	-	2	4
BASIC SERIES	**BODY MATERIAL**	**OUTLET PRESSURE RANGES**		**INLET, OUTLET, AND GAUGE PORT TYPE**	**INLET, OUTLET, AND GAUGE PORT SIZE**
26-15	**1 –** Brass **3 –** 2024 Aluminum **6 –** 316 Stainless Steel	**0 –** 0-50 psig 0-3.4 bar **1 –** 0-150 psig 0-10.3 bar **2 –** 0-250 psig 0-17.2 bar		**1 –** SAE **2 –** NPTF **3 –** MS33649	**4 –** 1/4" **6 –** 3/8" **8 –** 1/2" (Stainless Steel only)

WARNING! Do not attempt to select, install, use or maintain this product until you have read and fully understood the *TESCOM Safety, Installation and Operation Precautions.*

D26150541X012 © 2012 Emerson Process Management Regulator Technologies, Inc. All rights reserved. 05/2012.
Tescom, Emerson Process Management, and the Emerson Process Management design are marks of one of the Emerson Process Management group of companies. All other marks are the property of their respective owners.

EMERSON Process Management

www.tescom.com