44-4000 Series

Regulators - Pressure Reducing

D44401631X012

Specifications

For other materials or modifications, please consult TESCOM.

OPERATING PARAMETERS

Pressure rating per criteria of ANSI/ASME B31.3

Maximum Inlet Pressure
6000 psig / 414 bar

Outlet Pressure Ranges
50-1500 psig / 3.4-103 bar

Design Proof Pressure
150% maximum operating

Leakage
Bubble-tight

Operating Temperature
See Part Number Selector

Flow Capacity
Main Valve: C_V = 0.7 (C_V = 2.0 optional)
Vent Valve: C_V = 0.35

MEDIA CONTACT MATERIALS

Body
303 Stainless Steel, 316 Stainless Steel, Brass, Chrome-plated Brass

Main Valve Seat
CTFE, Vespel®

O-Ring
Buna-N, Viton®, Ethylene Propylene, Kalrez®

Gasket
CTFE, Vespel®

Back-up Ring
Teflon®

Trim
300 Series Stainless Steel, 17-4 PH Stainless Steel, Brass

OTHER

Cleaning
CGA 4.1 and ASTM G93

Weight
8 lbs / 3.6 kg

Teflon®, Viton®, Kalrez®, and Vespel® are registered trademarks of E.I. du Pont de Nemours and Company.

TESCOM 44-4000 dome loaded, spring biased regulator is designed for pressure tracking applications to maintain a constant differential pressure. Venting allows for pressure tracking increases and decreases.

Application

- Diving applications for emergency breathing air

Features and Benefits

- High flow: C_V = 0.7 or 2.0 (optional)
- Piston sensed
- Adjustable bias pressure ranges are available
- Venting (captured)
- Compatible with Tescom's Air Actuators and ER5000 Electropneumatic Controllers

TESCOM

44-4000 Series Regulator Drawings

PANEL MOUNT DIMENSIONS

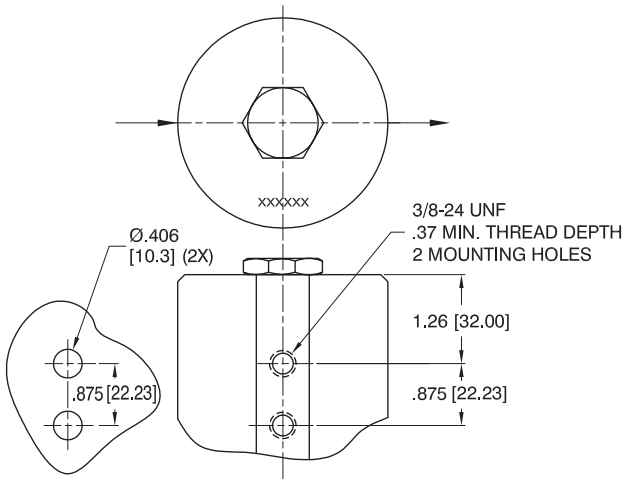

DOME LOAD/SPRING BIAS

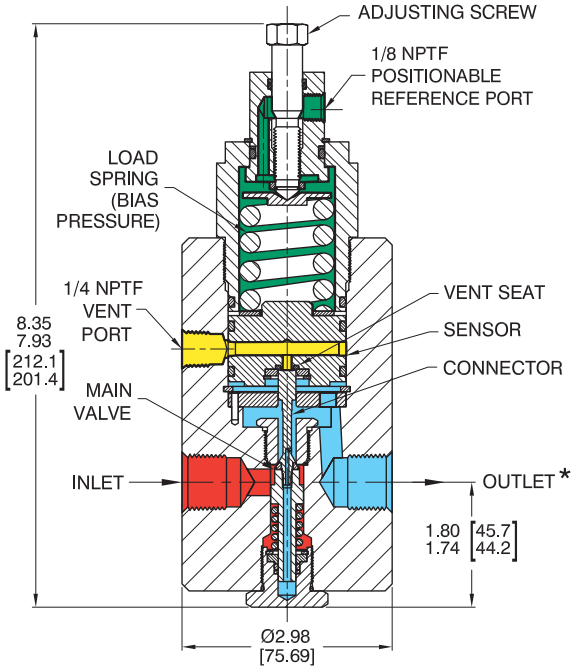

AIR LOAD

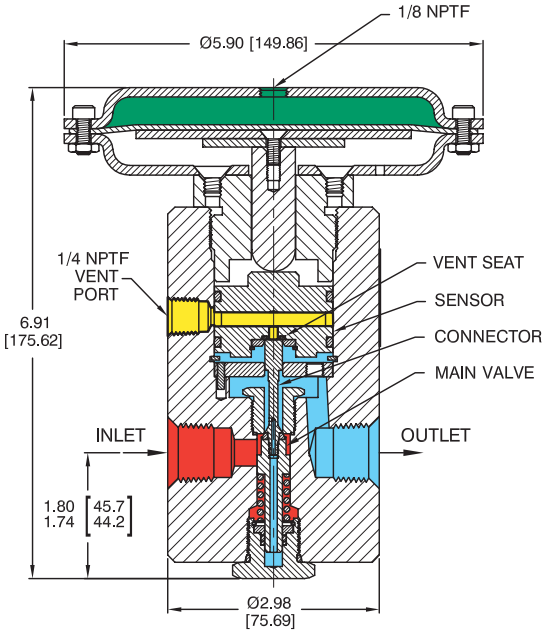

All dimensions are reference & nominal
Metric [millimeter] equivalents are in brackets

**NOTE: Outlet pressure equals bias spring setting plus reference pressure.*

EMERSON
Process Management

44-4000 Series Regulator Flow Charts

For more information on how to read flow curves, please refer to the Flow Curves and Calculations document (debul2007x012) in the TESCOM catalog or on www.tescom.com.

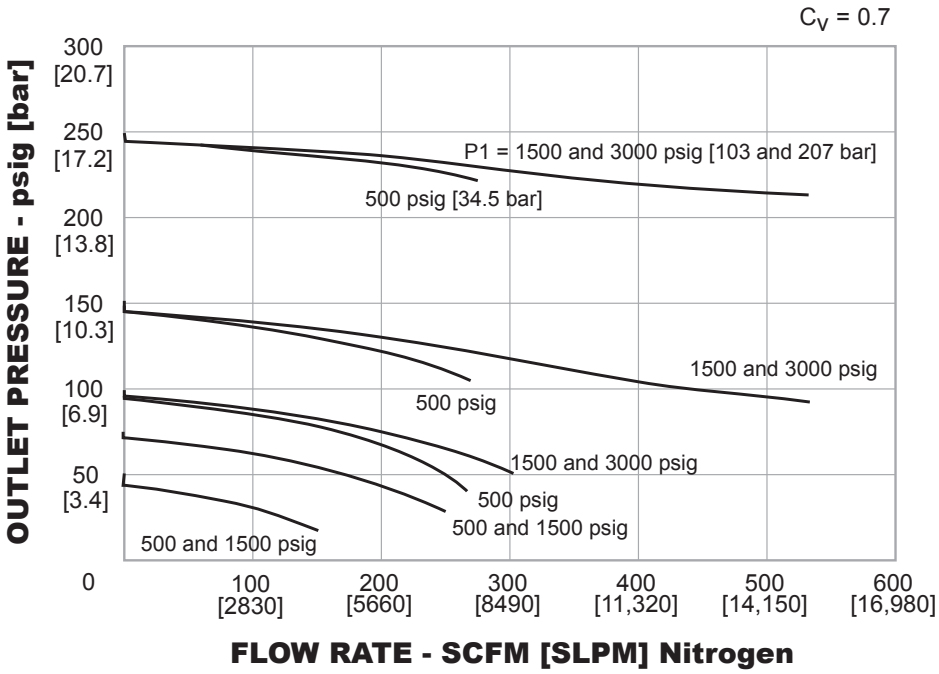

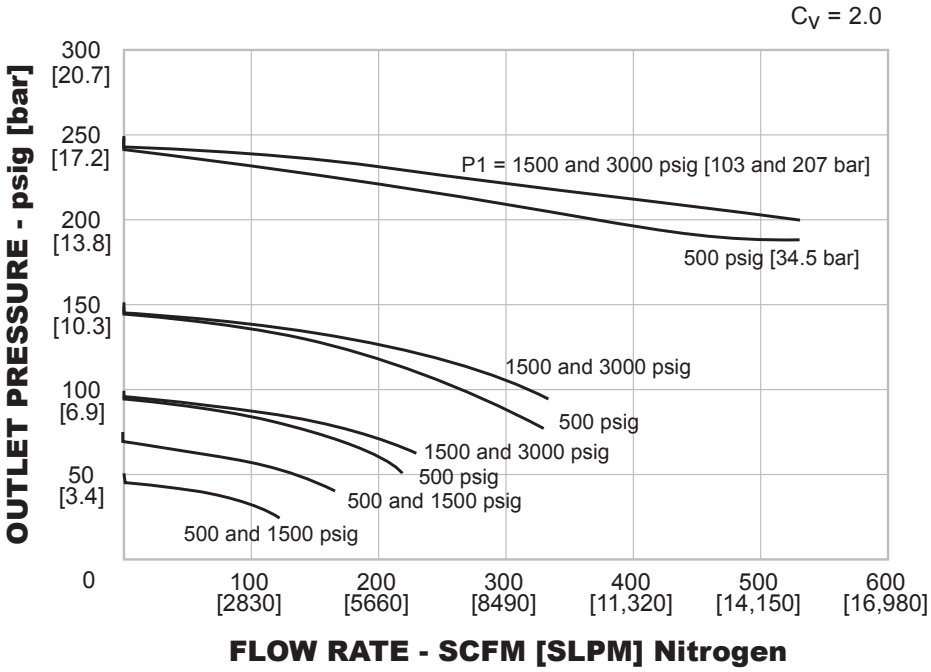

44-4000 Series Regulator Part Number Selector

Repair Kits, Accessories & Modifications may be available for this product. Please contact TESCOM for more information.

Example for selecting a part number:

DOME LOAD/SPRING BIAS

44-40	1	9	E				2	12		
BASIC SERIES	BODY MATERIAL	MAXIMUM BIAS PRESSURE	SOFT GOODS				INLET AND OUTLET PORT TYPE	INLET AND OUTLET PORT SIZE	DIA. 'A'	MODIFICATION OPTION
			O-RING	SEAT	GASKET	TEMPERATURE				
44-40	**1** – Brass **2** – 303 Stainless Steel **6** – 316 Stainless Steel **9** – Chrome-plated Brass	**1** – 100 psig 6.9 bar **2** – 200 psig 13.8 bar **3** – 350 psig 24.1 bar **4** – 120-150 psig 8.3-10.3 bar (maximum) **9** – 0-15 psig 0-1.0 bar	**E** – Viton® **M** – Ethylene Propylene **P** – Kalrez® **V** – Viton®	CTFE CTFE CTFE Vespel®	CTFE CTFE CTFE Vespel®	-15°F to 165°F -26°C to 74°C -40°F to 165°F -40°C to 74°C 0°F to 165°F -17°C to 74°C -15°F to 400°F -26°C to 204°C	**0** – BSP **1** – SAE **2** – NPTF **3** – MS33649	**8** – 1/2" **12** – 3/4" NPTF 3/4" SAE	2.98" 2.98" 3.48"	**-002** – C_V = 2.0

AIR LOAD

44-40	1	9	E				2	12	
BASIC SERIES	BODY MATERIAL	OUTLET PRESSURE	SOFT GOODS				INLET AND OUTLET PORT TYPE	INLET AND OUTLET PORT SIZE	MODIFICATION OPTIONS
			O-RING	SEAT	GASKET	TEMPERATURE			
44-40	**1** – Brass **2** – 303 Stainless Steel **6** – 316 Stainless Steel	**8** – 600 psig 41.4 bar **9** – 1500 psig 103 bar	**A** – Buna-N **E** – Viton® **M** – Ethylene Propylene **P** – Kalrez® **V** – Viton®	CTFE CTFE CTFE CTFE Vespel®	CTFE CTFE CTFE CTFE Vespel®	-40°F to 165°F -40°C to 74°C -15°F to 165°F -26°C to 74°C -40°F to 165°F -40°C to 74°C 0°F to 165°F -17°C to 74°C -15°F to 400°F -26°C to 204°C	**0** – BSP **1** – SAE **2** – NPTF **3** – MS33649	**8** – 1/2" **12** – 3/4"	**-014** – Air ratio, Venting C_V = 0.7 **-015** – Air ratio, Venting C_V = 2.0

WARNING! Do not attempt to select, install, use or maintain this product until you have read and fully understood the *TESCOM Safety, Installation and Operation Precautions.*

D44401631X012 © 2014 Emerson Process Management Regulator Technologies, Inc. All rights reserved. 09/2014.
Tescom, Emerson Process Management, and the Emerson Process Management design are marks of one of the Emerson Process Management group of companies. All other marks are the property of their respective owners.

EMERSON Process Management

www.tescom.com